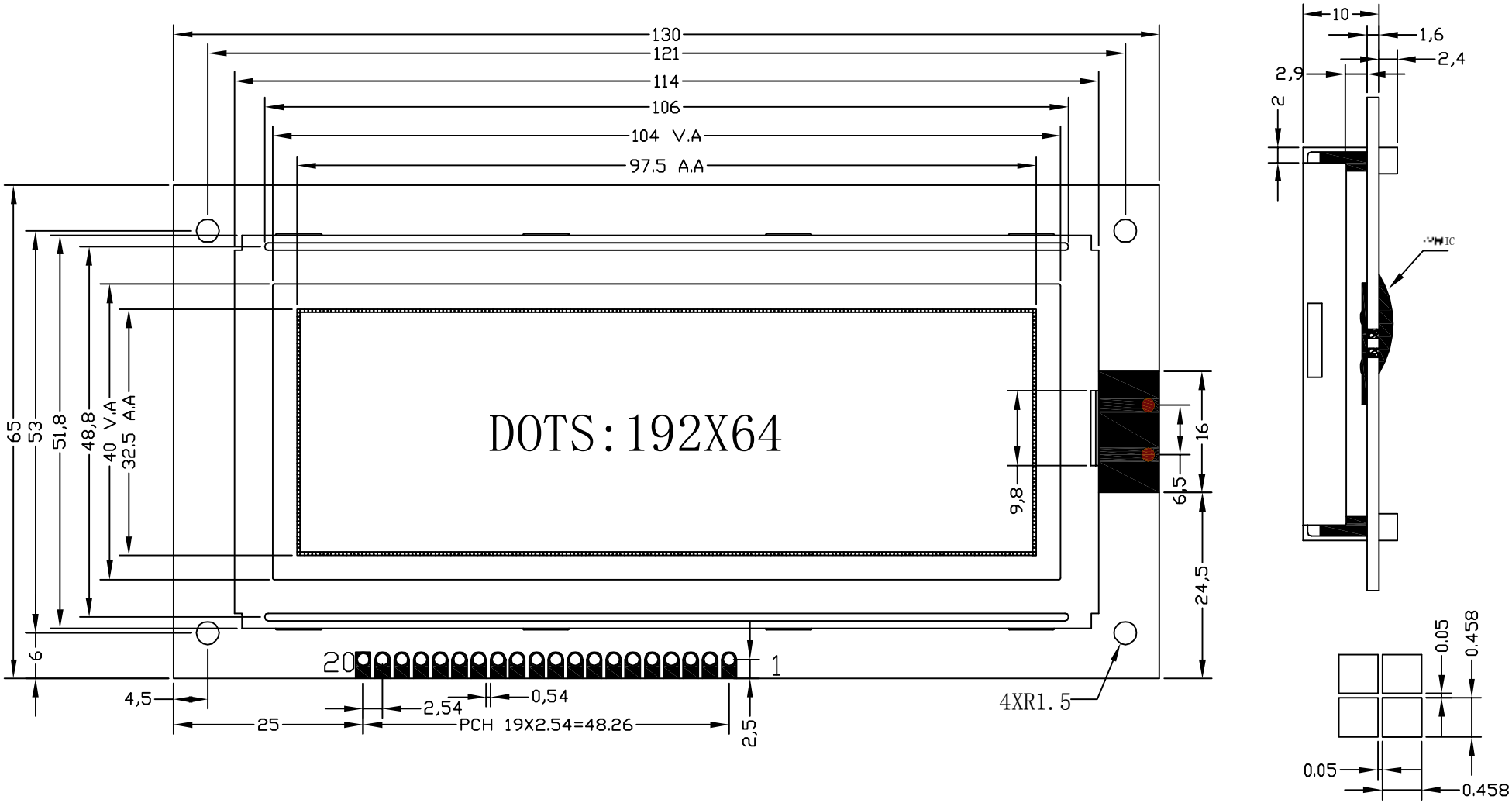

NOTES:

1. DISPLAY TYPE: STN/GREEN/POSITIVE
2. OPERATING VOLTAGE: 5V
3. OPERATING TEMPERATURE: −0°C~50°C
4. STORAGE TEMPERATURE: −10°C~60°C
5. DRIVE MODE: 1/64D,1/9B
6. VIEWING DIRECTION: 6:00
7. POLARIZER TYPE: TRANSFLECTIVE
8. CONNECTOR: ZEBRA

1	2	3	4	5	6	7	8	9	10
GND	VDD	VO	RS	R/W	E	D0	D1	D2	D3
11	12	13	14	15	16	17	18	19	20
D4	D5	D6	D7	CS1	/RET	CS2	CS3	VEE	BLA

HOT DISPLAY

Dwg Title: HTM19264A			
Dwg No.			Date: 2004-10-28
Scale	Unit: mm	Tol.: ±0.2	
Drawn: LIU	Checked		Approved